EOS Future

Sauna heater for private and commercial saunas. Floor-standing model.

Exclusive, luxury class sauna heater for the dry Finnish sauna.

EOS Future stands out through its futuristic reclining design with black body and high-contrast side strips.

The extravagant design is perfectly completed with the stylish base made of solid natural granite

Advantages and benefits:

- Extravagant, futuristic design
- Base cut of natural polished granite. Choice of 3 styles.
- Available in two alternative designs: Future and Future Stone with stylish granite strips along the top edge.
- Finest craftsmanship, each piece individually crafted to order.
- Durable, thoroughly tested stainless steel construction.
- Ideal for central position or installation in front of glass panels.
- Innovative safety guard rail made of layered stainless steel optionally available.
- Exceptional 8 years warranty incl. heating elements*
- Made in Germany quality from EOS.

Specifications:

Outer shell:	Matt black stainless steel, polished stainless steel side strips
Inner shell & rock store:	Stainless steel
Base plate:	Polished granite with steel frame
Power range:	9.0 | 10.0 | 12.0 kW | 15.0 kW
Power supply:	400 V 3N ~ 50 Hz
Stone volume:	~40 kg, included in delivery
Dimension (H x W x D):	89 x 60 x 64 cm

EOS Future Stone
Silver Wave Styling

EOS Future
Impala Nero Styling
Image shows optional guard rail

Impala Nero Styling

Giallo Veneziano Styling

Silver Wave Styling

CE UK CA IPx4

Made in Germany

* 8 years warranty by residental use and online product registration.
For full terms please refer to www.eos-sauna.com\garantiebedingungen

EOS Saunatechnik GmbH | Schneiderstriesch 1 | 35759 Driedorf | Germany | Tel. +49 (0) 2775 82 - 0 | www.eos-sauna.com | info@eos-sauna.de

Connection diagram

9 - 10 kW | 12 - 15 kW*

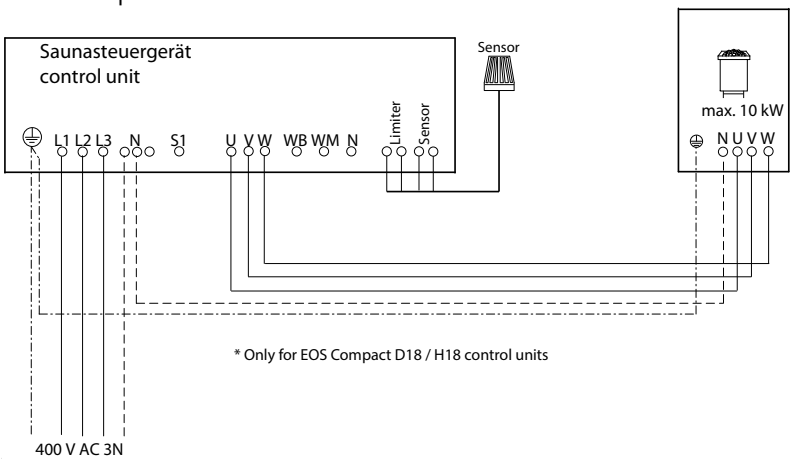

* Only for EOS Compact D18 / H18 control units

12 - 15 kW**

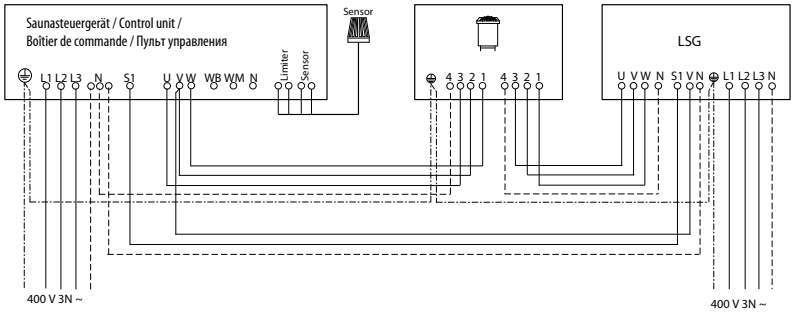

** Not for EOS Compact D18 / H18 control unit

Minimum clearances

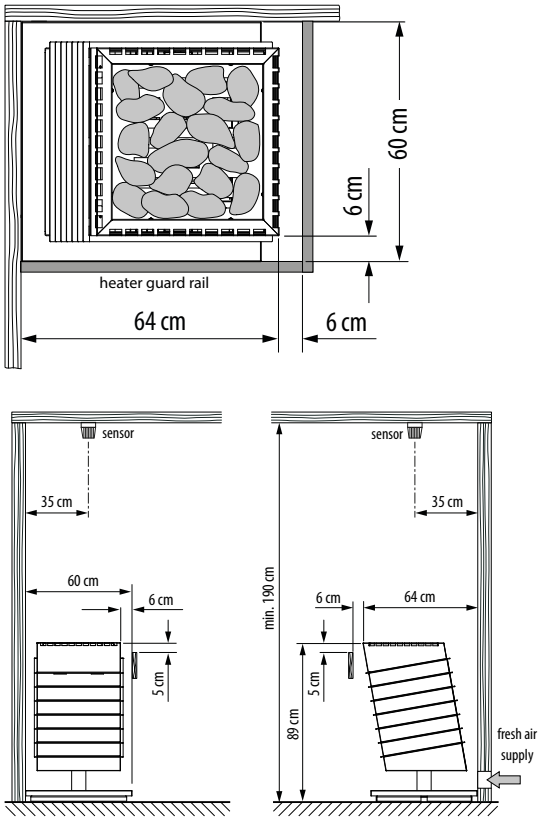

Technical specifications

Power	Electrical connection	Connection mains - control unit	Connection control unit - heater	Connection mains - LSG	Connection LSG - heater	Connection control unit - LSG unit
9.0 kW	400 V 3N ~ 50 Hz	5 x 2,5 mm² (5 x 4 mm² for Compact D18)	5 x 1,5 mm² (5 x 4 mm² for Compact D18)	—	—	—
10.0 kW						
12.0 kW				5 x 2,5 mm²	5 x 1,5 mm²	4 x 1,5 mm²
15.0 kW						

All cross sections of connection cables are minimum diameters in mm² (copper wire).

Options and accessories

Modell	Item no.
Brackets for safety guard rail	94 8108
Safety guard rail, stainless steel	94 8109
Sauna stones 50-100 mm, 20 kg	94 7336
Dark sauna stones 50-100 mm, 20 kg	94 7911
White sauna stones 50-80 mm, 10 kg	94 7698
EOSafe L safety system	94 8916

Power	Fuse protection control unit	Fuse protection LSG unit	Dimensions H/W/D, in cm	For sauna cabin size	Min. size air inlet and outlet	Weight without rocks	Stone filling	Power extension	Suitable control units
9.0 kW	3 x 16 A	—	89 / 60 / 64	9 - 14 m³	35 x 5 cm	Future 87,5 kg Future Stone 88,5 kg	~40 kg, caliber 50-100	—	Econ Compact EmoTec EmoStyle EmoTouch
10.0 kW				11 - 15 m³	35 x 6 cm				
12.0 kW	3 x 16 A (3 x 35 A bei Compact D18)	3 x 16 A		14 - 18 m³	35 x 7 cm			LSG 10 (except Compact D18)	
15.0 kW				18 - 25 m³	35 x 9 cm				

Druck-Nr.: 2934 5209 07.23

Technical changes reserved

EOS Saunatechnik GmbH | Schneiderstriesch 1 | 35759 Driedorf | Germany | Tel. +49 (0) 2775 82 - 0 | www.eos-sauna.com | info@eos-sauna.de